US009634379B2

(12) **United States Patent**
Kang

(10) **Patent No.: US 9,634,379 B2**
(45) **Date of Patent: Apr. 25, 2017**

(54) **RADIATION DEVICE FOR PLANAR INVERTED-F ANTENNA AND ANTENNA USING THE SAME**

(71) Applicant: **LG INNOTEK CO., LTD.**, Seoul (KR)

(72) Inventor: **Jin Ho Kang**, Seoul (KR)

(73) Assignee: **LG INNOTEK CO., LTD.**, Seoul (KR)

(*) Notice: Subject to any disclaimer, the term of this patent is extended or adjusted under 35 U.S.C. 154(b) by 298 days.

(21) Appl. No.: **13/662,608**

(22) Filed: **Oct. 29, 2012**

(65) **Prior Publication Data**

US 2013/0106660 A1 May 2, 2013

(30) **Foreign Application Priority Data**

Oct. 28, 2011 (KR) 10-2011-0110925

(51) **Int. Cl.**
H01Q 1/24 (2006.01)
H01Q 9/04 (2006.01)
H01Q 5/371 (2015.01)

(52) **U.S. Cl.**
CPC ***H01Q 1/243*** (2013.01); ***H01Q 5/371*** (2015.01); ***H01Q 9/0414*** (2013.01)

(58) **Field of Classification Search**
CPC H01Q 1/243
USPC ..... 343/700 MS, 702
See application file for complete search history.

(56) **References Cited**

U.S. PATENT DOCUMENTS

6,795,028 B2 * 9/2004 Stutzman et al. 343/702
6,836,252 B2 * 12/2004 Tai ..... H01Q 1/243 343/700 MS
6,985,114 B2 * 1/2006 Egashira G06F 1/1616 29/600
7,298,334 B2 * 11/2007 Fang et al. ..... 343/700 MS
7,352,329 B2 * 4/2008 Chung ..... H01Q 1/243 343/700 MS
7,474,267 B2 * 1/2009 Chen et al. 343/702
2006/0262016 A1 * 11/2006 Hung H01Q 9/42 343/702

FOREIGN PATENT DOCUMENTS

KR 10-2005-0001488 A 1/2005
KR 10-2010-0095910 A 9/2010

* cited by examiner

Primary Examiner — Dameon E Levi
Assistant Examiner — Walter Davis
(74) *Attorney, Agent, or Firm* — Birch, Stewart, Kolasch & Birch, LLP

(57) **ABSTRACT**

A planar inverted-F antenna according to an embodiment includes a ground plane, a radiator spaced apart from the ground plane, and a feeding member for feeding a current to the radiator. A first slot is formed in the radiator, and the first slot is excited as the current is fed to the radiator through the feeding member such that the current flows around the first slot and the first slot implements a resonance frequency according to the excitation.

12 Claims, 3 Drawing Sheets

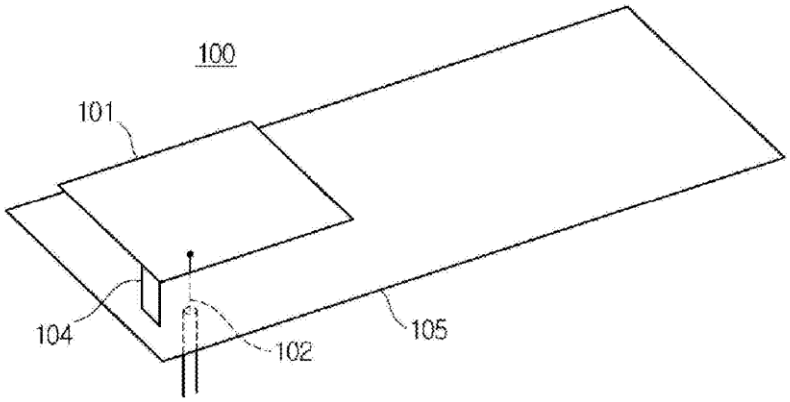

US009634385B2

(12) **United States Patent**
Feng et al.

(10) **Patent No.: US 9,634,385 B2**
(45) **Date of Patent: Apr. 25, 2017**

(54) **ANTENNA APPARATUS AND TERMINAL DEVICE**

(71) Applicant: **Huawei Device Co., Ltd.**, Shenzhen (CN)

(72) Inventors: **Chao Feng**, Beijing (CN); **Tiezhu Liang**, Beijing (CN)

(73) Assignee: **Huawei Device Co., Ltd.**, Shenzhen (CN)

(*) Notice: Subject to any disclaimer, the term of this patent is extended or adjusted under 35 U.S.C. 154(b) by 0 days.

(21) Appl. No.: **14/816,190**

(22) Filed: **Aug. 3, 2015**

(65) **Prior Publication Data**

US 2015/0340761 A1 Nov. 26, 2015

Related U.S. Application Data

(63) Continuation of application No. PCT/CN2014/071740, filed on Jan. 29, 2014.

(30) **Foreign Application Priority Data**

Feb. 4, 2013 (CN) 2013 1 0043758

(51) **Int. Cl.**
H01Q 1/38 (2006.01)
H01Q 7/00 (2006.01)
(Continued)

(52) **U.S. Cl.**
CPC ***H01Q 1/38*** (2013.01); ***H01Q 1/243*** (2013.01); ***H01Q 5/371*** (2015.01); ***H01Q 7/00*** (2013.01);
(Continued)

(58) **Field of Classification Search**
CPC H01Q 1/38; H01Q 9/0421; H01Q 5/371; H01Q 1/243; H01Q 9/0442; H01Q 7/00; H01Q 9/42
See application file for complete search history.

(56) **References Cited**

U.S. PATENT DOCUMENTS

8,217,841 B2 7/2012 Hossain et al.
2003/0151555 A1 8/2003 Holshouser
(Continued)

FOREIGN PATENT DOCUMENTS

CN 101496224 A 7/2009
CN 101809813 A 8/2010
(Continued)

OTHER PUBLICATIONS

Partial English Translation and Abstract of Chinese Patent Application No. CN102403568, Nov. 9, 2015, 4 pages.
(Continued)

Primary Examiner — Hoang Nguyen
Assistant Examiner — Michael Bouizza
(74) *Attorney, Agent, or Firm* — Quarles & Brady LLP

(57) **ABSTRACT**

An antenna apparatus and a terminal device are provided, which relate to the field of communications technologies. A switch disposed at an end of an antenna arm controls an antenna to switch to different resonance frequencies, therefore reduced antenna efficiency caused by switch loss is avoided and space occupied by the antenna is not increased. The antenna apparatus includes an antenna and a printed circuit board, where a feedpoint and a first grounding point are disposed on the printed circuit board, the antenna is connected to the feedpoint, and the antenna includes a first arm.

12 Claims, 4 Drawing Sheets

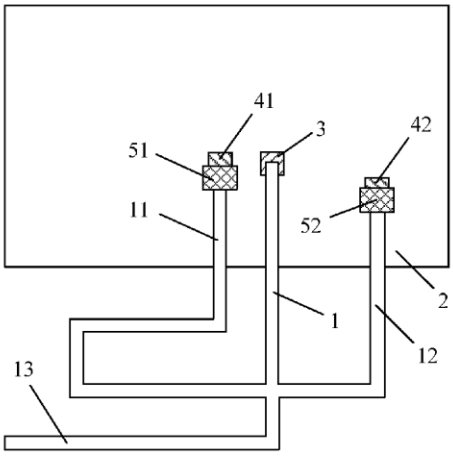

US009634404B1

(12) **United States Patent**
Rowson et al.

(10) **Patent No.: US 9,634,404 B1**
(45) **Date of Patent: Apr. 25, 2017**

(54) **BEAM STEERING MULTIBAND ARCHITECTURE**

(71) Applicants: **Sebastian Rowson**, San Diego, CA (US); **Abhishek Singh**, San Diego, CA (US); **Jeffrey Shamblin**, San Marcos, CA (US); **Laurent Desclos**, San Diego, CA (US)

(72) Inventors: **Sebastian Rowson**, San Diego, CA (US); **Abhishek Singh**, San Diego, CA (US); **Jeffrey Shamblin**, San Marcos, CA (US); **Laurent Desclos**, San Diego, CA (US)

(73) Assignee: **ETHERTRONICS, INC.**, San Diego, CA (US)

(*) Notice: Subject to any disclaimer, the term of this patent is extended or adjusted under 35 U.S.C. 154(b) by 0 days.

(21) Appl. No.: **14/219,002**

(22) Filed: **Mar. 19, 2014**

Related U.S. Application Data

(63) Continuation of application No. 13/968,379, filed on Aug. 15, 2013, now abandoned.

(60) Provisional application No. 61/683,675, filed on Aug. 15, 2012.

(51) **Int. Cl.**
H01Q 3/00 (2006.01)
H01Q 21/29 (2006.01)

(52) **U.S. Cl.**
CPC ***H01Q 21/29*** (2013.01)

(58) **Field of Classification Search**
CPC H01Q 3/00; H01Q 1/243; H01Q 9/0421; H01Q 9/0442
USPC ..... 343/700 MS, 745, 833, 876
See application file for complete search history.

(56) **References Cited**

U.S. PATENT DOCUMENTS

7,330,152	B2 *	2/2008	Zhang	H01Q 3/24 343/700 MS
7,696,928	B2 *	4/2010	Rowell	H01Q 9/0407 343/700 MS
8,473,017	B2 *	6/2013	Milosavljevic	H01Q 1/241 343/702
8,760,360	B2 *	6/2014	Kuo	H01Q 1/243 343/850
2013/0194139	A1 *	8/2013	Nickel	H01Q 5/328 343/703

* cited by examiner

Primary Examiner — Tho G Phan
(74) *Attorney, Agent, or Firm* — Coastal Patent Law Group, P.C.

(57) **ABSTRACT**

An active antenna system developed to beam steer at multiple frequency bands provides improved performance for fixed and mobile communication systems. Methods of altering the current mode on a single radiator are described wherein the radiation pattern of the antenna is varied as the antenna modes are altered. Techniques to restrict or expand the frequency bandwidth of the beam steering technique are described to provide the capability to beam steer at receive frequencies or transmit frequencies only, and techniques are described where beam steering can occur at both transmit and receive frequency bands from a single active antenna system.

28 Claims, 17 Drawing Sheets

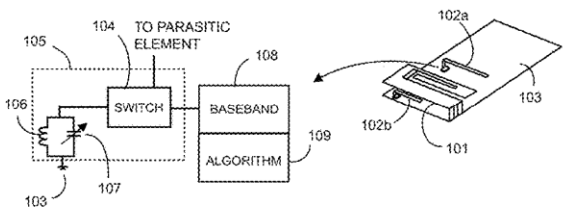

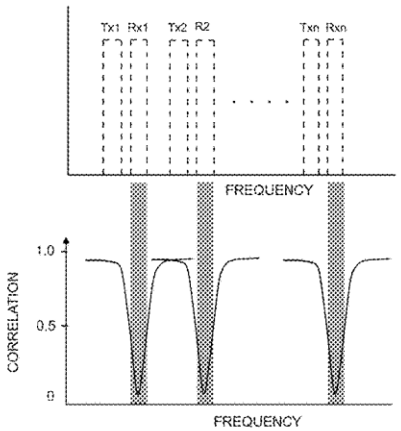

US009640854B2

(12) **United States Patent**
Nakagawa

(10) **Patent No.: US 9,640,854 B2**
(45) **Date of Patent: May 2, 2017**

(54) **WIRELESS COMMUNICATION DEVICE**

(71) Applicant: **ALPS ELECTRIC CO., LTD.**, Ota-ku, Tokyo (JP)

(72) Inventor: **Masashi Nakagawa**, Tokyo (JP)

(73) Assignee: **ALPS ELECTRIC CO., LTD.**, Tokyo (JP)

(*) Notice: Subject to any disclaimer, the term of this patent is extended or adjusted under 35 U.S.C. 154(b) by 0 days.

(21) Appl. No.: **14/812,450**

(22) Filed: **Jul. 29, 2015**

(65) **Prior Publication Data**

US 2016/0043463 A1 Feb. 11, 2016

(30) **Foreign Application Priority Data**

Aug. 6, 2014 (JP) 2014-160517

(51) **Int. Cl.**

H01Q 1/38	(2006.01)
H01Q 9/04	(2006.01)
H01Q 1/08	(2006.01)
H01Q 1/24	(2006.01)
H01Q 1/52	(2006.01)
H01Q 9/42	(2006.01)

(52) **U.S. Cl.**
CPC ***H01Q 1/084*** (2013.01); ***H01Q 1/243*** (2013.01); ***H01Q 1/526*** (2013.01); ***H01Q 9/42*** (2013.01)

(58) **Field of Classification Search**
CPC H01Q 1/38; H01Q 9/04
USPC ..... 343/700 MS
See application file for complete search history.

(56) **References Cited**

U.S. PATENT DOCUMENTS

2007/0290944 A1* 12/2007 Takaki H01Q 1/243 343/873
2014/0210675 A1* 7/2014 Hwang H01Q 1/44 343/702

FOREIGN PATENT DOCUMENTS

JP	2003-298340	10/2003
JP	2010-258789	11/2010

* cited by examiner

Primary Examiner — Graham Smith
Assistant Examiner — Andrea Lindgren Baltzell
(74) *Attorney, Agent, or Firm* — Hunton & Williams LLP

(57) **ABSTRACT**

A wireless communication device includes a circuit board having a pattern formed on a surface thereof, a wireless communication main body configured to perform wireless communication, a shield cover configured to cover and shield the wireless communication main body arranged on the one surface of the circuit board, and an antenna connected to the wireless communication main body, in which the shield cover and the antenna include one metal plate, an attachment portion for attachment to a product, the antenna is an inverted F-antenna including an antenna main body, a feed portion, and a short-circuit portion, the short-circuit portion provided on one end side of the antenna and a top plate portion of the shield cover facing the wireless communication main body are connected by a short-circuit plate portion, and the feed portion is connected to a feed land formed on the surface of the circuit board.

4 Claims, 7 Drawing Sheets

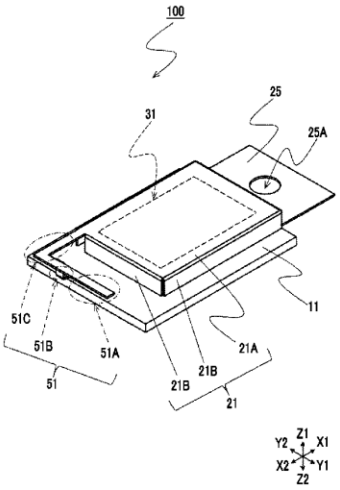

US009640859B2

(12) **United States Patent**
Lim

(10) **Patent No.: US 9,640,859 B2**
(45) **Date of Patent: May 2, 2017**

(54) **ANTENNA APPARATUS AND METHOD OF MANUFACTURING THE SAME**

(71) Applicant: **LG INNOTEK CO., LTD.**, Seoul (KR)

(72) Inventor: **Dong Uk Lim**, Seoul (KR)

(73) Assignee: **LG INNOTEK CO., LTD.**, Seoul (KR)

(*) Notice: Subject to any disclaimer, the term of this patent is extended or adjusted under 35 U.S.C. 154(b) by 251 days.

(21) Appl. No.: **14/024,905**

(22) Filed: **Sep. 12, 2013**

(65) **Prior Publication Data**

US 2014/0071019 A1 Mar. 13, 2014

(30) **Foreign Application Priority Data**

Sep. 13, 2012 (KR) 10-2012-0101788

(51) **Int. Cl.**

H01Q 1/36	(2006.01)
H01Q 1/24	(2006.01)
H01Q 1/40	(2006.01)

(52) **U.S. Cl.**

CPC ***H01Q 1/36*** (2013.01); ***H01Q 1/243*** (2013.01); ***H01Q 1/40*** (2013.01); *Y10T 156/1052* (2015.01)

(58) **Field of Classification Search**

CPC H01Q 1/36
USPC 343/873
See application file for complete search history.

(56) **References Cited**

U.S. PATENT DOCUMENTS

5,709,832	A	1/1998	Hayes et al.	
2010/0271281	A1*	10/2010	Tsao et al.	343/873
2011/0068984	A1*	3/2011	Han	B29C 45/14065 343/702
2011/0199269	A1*	8/2011	Sung	H01Q 1/243 343/702
2011/0260932	A1*	10/2011	Hong	B29C 45/14065 343/702
2012/0235879	A1*	9/2012	Eder	H01Q 1/243 343/873

FOREIGN PATENT DOCUMENTS

EP	1 937 039	A1	6/2008
JP	2002-42079	A	2/2002
JP	3104382	U	7/2004
JP	2005-115862	A	4/2005
JP	2011-66691	A	3/2011
JP	2012-19299	A	1/2012
JP	2012-034167	A	2/2012

* cited by examiner

Primary Examiner — Dameon E Levi
Assistant Examiner — Walter Davis
(74) *Attorney, Agent, or Firm* — Birch, Stewart, Kolasch & Birch, LLP

(57) **ABSTRACT**

Disclosed are an antenna apparatus and a method of manufacturing the same. The antenna apparatus includes a base, a radiation device on the base, and a protective layer formed on the radiation device to expose a partial region of the radiation device. The outer appearance failure of the antenna apparatus can be prevented, and the electrical performance of the antenna apparatus can be ensured.

8 Claims, 3 Drawing Sheets

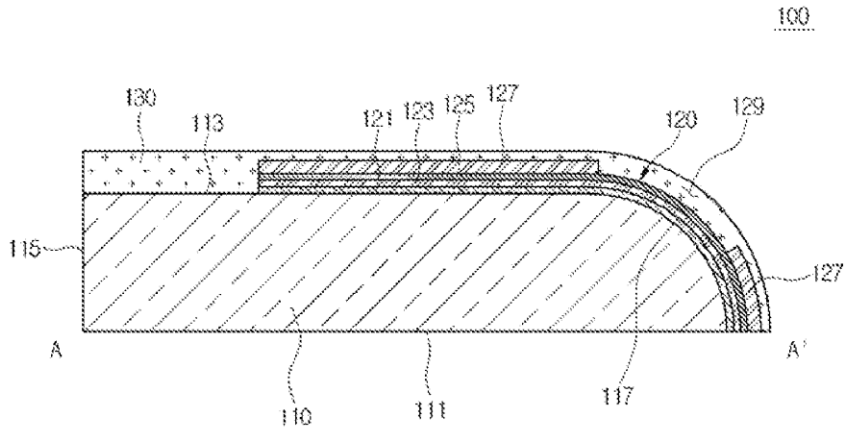

US009640864B2

(12) **United States Patent**
Wu et al.

(10) **Patent No.: US 9,640,864 B2**
(45) **Date of Patent: May 2, 2017**

(54) **RADIO-FREQUENCY TRANSCEIVER DEVICE CAPABLE OF REDUCING SPECIFIC ABSORPTION RATE**

(71) Applicant: **Wistron NeWeb Corporation**, Hsinchu (TW)

(72) Inventors: **Yi-Feng Wu**, Hsinchu (TW); **Cheng-Wei Chang**, Hsinchu (TW); **Wei-Shan Chang**, Hsinchu (TW); **Chia-Tien Li**, Hsinchu (TW)

(73) Assignee: **Wistron NeWeb Corporation**, Hsinchu (TW)

(*) Notice: Subject to any disclaimer, the term of this patent is extended or adjusted under 35 U.S.C. 154(b) by 204 days.

(21) Appl. No.: **14/308,718**

(22) Filed: **Jun. 19, 2014**

(65) **Prior Publication Data**

US 2014/0375520 A1 Dec. 25, 2014

Related U.S. Application Data

(60) Provisional application No. 61/837,181, filed on Jun. 20, 2013.

(51) **Int. Cl.**

H01Q 1/52	(2006.01)
H01Q 17/00	(2006.01)
H01Q 1/24	(2006.01)
H01Q 5/371	(2015.01)

(52) **U.S. Cl.**

CPC ***H01Q 1/52*** (2013.01); ***H01Q 1/245*** (2013.01); ***H01Q 5/371*** (2015.01); ***H01Q 17/001*** (2013.01)

(58) **Field of Classification Search**

CPC H01Q 1/245; H01Q 1/52

See application file for complete search history.

(56) **References Cited**

U.S. PATENT DOCUMENTS

7,304,616	B1	12/2007	Chen	
7,646,349	B2	1/2010	Wee	
8,902,109	B2 *	12/2014	Chiang	H01Q 1/243 343/702
2005/0024275	A1	2/2005	Jo	
2011/0199272	A1	8/2011	He	
2012/0038516	A1 *	2/2012	Hsieh	H01Q 1/243 343/702

(Continued)

FOREIGN PATENT DOCUMENTS

CN	101212500 A	7/2008
TW	I353689	12/2011

OTHER PUBLICATIONS

Antenna Theory: A Review, Balanis, Proc. IEEE vol. 80 No. 1 Jan. 1992.*

Primary Examiner — Robert Karacsony
Assistant Examiner — Amal Patel
(74) *Attorney, Agent, or Firm* — Winston Hsu; Scott Margo

(57) **ABSTRACT**

A radio-frequency transceiver device capable of reducing a specific absorption rate (SAR) includes an antenna including a radiating element and a grounding element, wherein the radiating element substantially extends along a first direction on a first plane; and a SAR suppression unit, substantially extending along the first direction and an edge of the radiating element of the antenna on the first plane and apart from the edge of the radiating element by a gap, for reducing the SAR of the antenna.

7 Claims, 38 Drawing Sheets

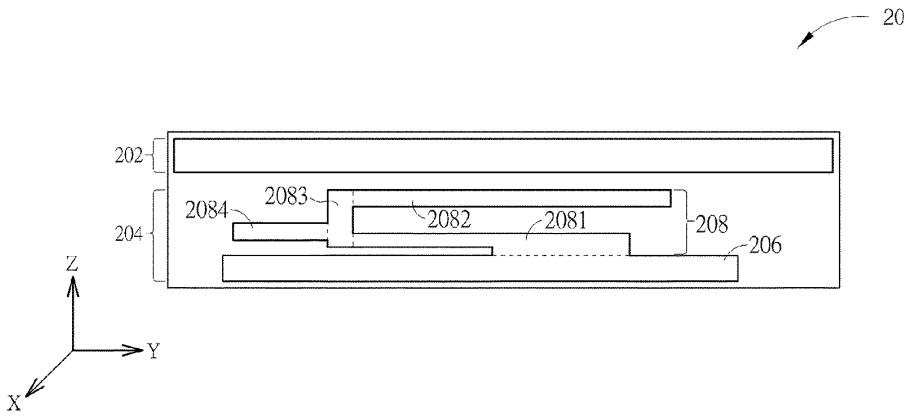

US009640868B2

(12) **United States Patent**
Peng et al.

(10) **Patent No.: US 9,640,868 B2**
(45) **Date of Patent: May 2, 2017**

(54) **WIDEBAND ANTENNA AND WIRELESS COMMUNICATION DEVICE**

(71) Applicant: **Wistron NeWeb Corporation**, Hsinchu (TW)

(72) Inventors: **Huang-Tse Peng**, Hsinchu (TW); **Kuo-Jen Lai**, Hsinchu (TW); **Wen-Tsan Chung**, Hsinchu (TW); **Cheng-Feng Li**, Hsinchu (TW); **Yu-Yi Chu**, Hsinchu (TW)

(73) Assignee: **Wistron NeWeb Corporation**, Hsinchu (TW)

(*) Notice: Subject to any disclaimer, the term of this patent is extended or adjusted under 35 U.S.C. 154(b) by 154 days.

(21) Appl. No.: **14/464,717**

(22) Filed: **Aug. 21, 2014**

(65) **Prior Publication Data**

US 2015/0333390 A1 Nov. 19, 2015

(30) **Foreign Application Priority Data**

May 16, 2014 (TW) ..... 103117361 A

(51) **Int. Cl.**
H01Q 1/24 (2006.01)
H01Q 5/378 (2015.01)
H01Q 9/30 (2006.01)

(52) **U.S. Cl.**
CPC ***H01Q 5/378*** (2015.01); ***H01Q 1/243*** (2013.01); ***H01Q 9/30*** (2013.01)

(58) **Field of Classification Search**
CPC H01Q 1/243; H01Q 1/38; H01Q 9/0421; H01Q 21/28
USPC 343/702, 878, 872, 725
See application file for complete search history.

(56) **References Cited**

U.S. PATENT DOCUMENTS

7,336,229 B1 * 2/2008 Tseng ..... H01Q 1/2258 343/700 MS
2012/0268328 A1 * 10/2012 Kim H01Q 1/243 343/702
2014/0097997 A1 4/2014 Chang

OTHER PUBLICATIONS

W. Y. Chen and K. L. Wong, "Wideband coupled-fed PIFA for HAC penta-band clamshell mobile phone," Microwave and Optical Technology Letters, vol. 51, No. 10, pp. 2369-2374, Oct. 2009.

* cited by examiner

Primary Examiner — Dameon E Levi
Assistant Examiner — Collin Dawkins
(74) *Attorney, Agent, or Firm* — Winston Hsu; Scott Margo

(57) **ABSTRACT**

A wideband antenna includes a first radiator formed as a part of a metal frame for resonating a first signal component of a radio-frequency signal, a second radiator disposed within an area enclosed by the metal frame for resonating a second signal component of the radio-frequency signal, and a feed terminal electrically connected between the second radiator and a ground for feeding the radio-frequency signal, wherein there is a distance between the first and second radiators such that a coupling effect is induced between the first and second radiators, which allows the first signal component being fed from the second radiator into the first radiator via the coupling effect.

6 Claims, 5 Drawing Sheets

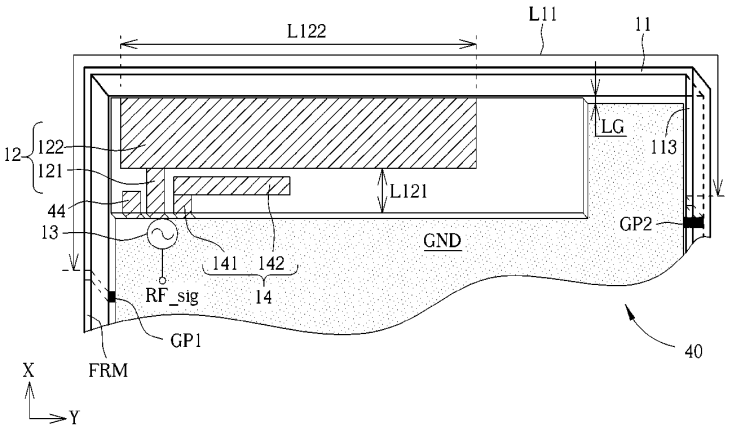

US009640871B2

(12) **United States Patent**
Cho et al.

(10) **Patent No.: US 9,640,871 B2**
(45) **Date of Patent: May 2, 2017**

(54) **BROADBAND VARIABLE ANTENNA DEVICE AND PORTABLE TERMINAL HAVING THE SAME**

(71) Applicant: **Samsung Electronics Co., Ltd**, Gyeonggi-do (KR)

(72) Inventors: **Bum-Jin Cho**, Gyeonggi-do (KR); **Gyu-Sub Kim**, Gyeonggi-do (KR); **Joon-Ho Byun**, Gyeonggi-do (KR)

(73) Assignee: **Samsung Electronics Co., Ltd.**, Suwon-si (KR)

(*) Notice: Subject to any disclaimer, the term of this patent is extended or adjusted under 35 U.S.C. 154(b) by 210 days.

(21) Appl. No.: **13/939,109**

(22) Filed: **Jul. 10, 2013**

(65) **Prior Publication Data**

US 2014/0015723 A1 Jan. 16, 2014

(30) **Foreign Application Priority Data**

Jul. 10, 2012 (KR) 10-2012-0074930

(51) **Int. Cl.**
H01Q 9/04 (2006.01)
H01Q 13/10 (2006.01)

(52) **U.S. Cl.**
CPC ***H01Q 13/106*** (2013.01); ***H01Q 13/103*** (2013.01); *H01Q 9/0414* (2013.01)

(58) **Field of Classification Search**
CPC H01Q 1/44; H01Q 1/24; H01Q 1/241; H01Q 1/242; H01Q 1/243; H01Q 1/38;
(Continued)

(56) **References Cited**

U.S. PATENT DOCUMENTS

6,603,430 B1 * 8/2003 Hill et al. 343/702
6,639,559 B2 * 10/2003 Okabe et al. ..... 343/700 MS
(Continued)

FOREIGN PATENT DOCUMENTS

CN 101243583 A 8/2008
CN 102300437 A 12/2011
(Continued)

OTHER PUBLICATIONS

Extended European Search Report dated Sep. 2, 2013 in European Patent Application No. 13173137.4; 6 pages.
(Continued)

Primary Examiner — Graham Smith
Assistant Examiner — Patrick Holecek

(57) **ABSTRACT**

Disclosed is an antenna device for a portable terminal, including a circuit board having a conductive layer attached on a surface, a first slit formed by partially removing the conductive layer in a position adjacent to one side of the circuit board, the first slit extending in parallel with a lateral periphery of the circuit board, a radiation portion comprising part of the conductive layer positioned on the lateral periphery of the circuit board in one side of the first slit, and a feed line placed on the first slit and adapted to feed the radiation portion from the other side of the first slit. The radiation portion further comprises a second slit extending from the first slit to the lateral periphery of the circuit board across part of the conductive layer forming the radiation portion, and a frequency adjustment element placed on the second slit.

20 Claims, 7 Drawing Sheets

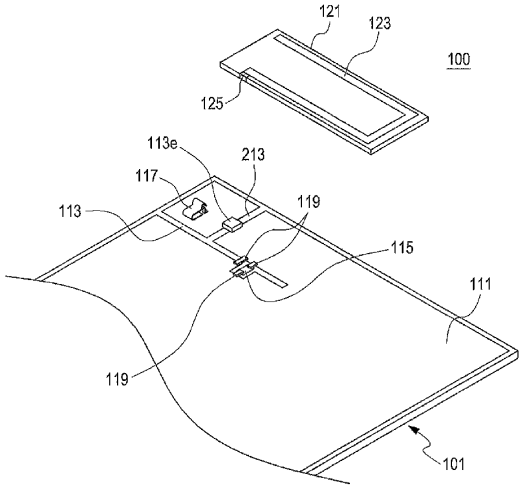

US009647320B2

(12) **United States Patent**
Lin

(10) **Patent No.: US 9,647,320 B2**
(45) **Date of Patent: May 9, 2017**

(54) **ANTENNA ASSEMBLY AND ELECTRONIC DEVICE USING THE ANTENNA ASSEMBLY**

(71) Applicant: **Chiun Mai Communication Systems, Inc.**, New Taipei (TW)

(72) Inventor: **Yen-Hui Lin**, New Taipei (TW)

(73) Assignee: **Chiun Mai Communication Systems, Inc.**, New Taipei (TW)

(*) Notice: Subject to any disclaimer, the term of this patent is extended or adjusted under 35 U.S.C. 154(b) by 226 days.

(21) Appl. No.: **14/023,692**

(22) Filed: **Sep. 11, 2013**

(65) **Prior Publication Data**

US 2014/0292584 A1 Oct. 2, 2014

(30) **Foreign Application Priority Data**

Apr. 2, 2013 (TW) ..... 102111899 A

(51) **Int. Cl.**
H01Q 1/24 (2006.01)
H01Q 9/30 (2006.01)
H01Q 21/00 (2006.01)

(52) **U.S. Cl.**
CPC ***H01Q 1/243*** (2013.01); ***H01Q 9/30*** (2013.01); ***H01Q 21/00*** (2013.01)

(58) **Field of Classification Search**
CPC H01Q 1/42; H01Q 1/243; H01Q 9/30; H01Q 21/00
USPC 343/700
See application file for complete search history.

(56) **References Cited**

U.S. PATENT DOCUMENTS

7,602,341 B2 * 10/2009 Wei-Shan ..... H01Q 1/2258 343/700 MS
2005/0128151 A1 * 6/2005 Kwak H01Q 1/243 343/702
2011/0136447 A1 * 6/2011 Pascolini H01Q 1/243 455/90.2
2011/0248895 A1 * 10/2011 Bungo H01Q 1/243 343/702

* cited by examiner

Primary Examiner — Dameon E Levi
Assistant Examiner — Walter Davis
(74) *Attorney, Agent, or Firm* — Steven Reiss

(57) **ABSTRACT**

An antenna assembly includes a first antenna, a second antenna, and a metal member. The second antenna is separate and spaced from the first antenna. A gap is defined on the metal member to divide the metal member into a first frame assembly and a second frame assembly. The first antenna is connected to the first frame assembly, the second antenna is connected to the second frame assembly, and the first antenna is electronically coupled to the second antenna.

20 Claims, 4 Drawing Sheets

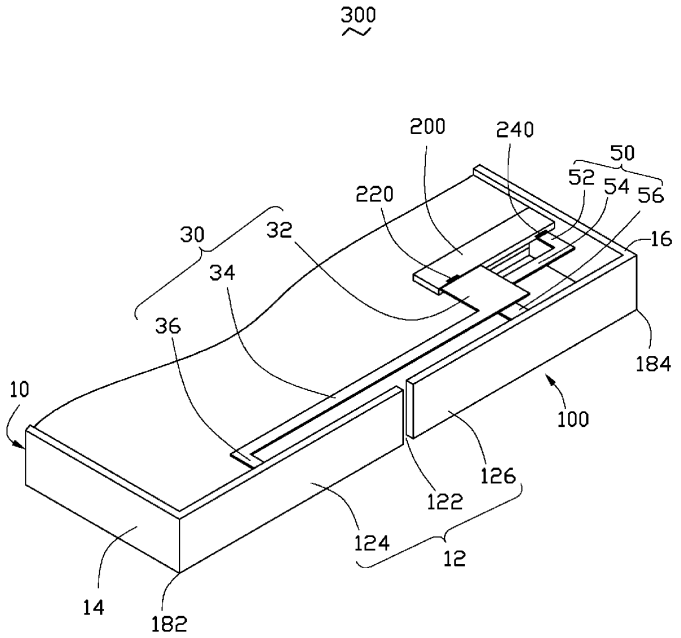

US009647321B2

(12) **United States Patent**
Park et al.

(10) **Patent No.: US 9,647,321 B2**
(45) **Date of Patent: May 9, 2017**

(54) **ANTENNA FOR PORTABLE DEVICE**

(71) Applicant: **Samsung Electronics Co., Ltd.**, Gyeonggi-do (KR)

(72) Inventors: **Hoon Park**, Seoul (KR); **Ho-Saeng Kim**, Gyeonggi-do (KR); **Yeon-Woo Kim**, Seoul (KR); **Seong-Tae Jeong**, Gyeonggi-do (KR); **Sang-Min Han**, Gyeonggi-do (KR)

(73) Assignee: **Samsung Electronics Co., Ltd.**, Yeongtong-gu, Suwon-si, Gyeonggi-do (KR)

(*) Notice: Subject to any disclaimer, the term of this patent is extended or adjusted under 35 U.S.C. 154(b) by 197 days.

(21) Appl. No.: **14/101,550**

(22) Filed: **Dec. 10, 2013**

(65) **Prior Publication Data**

US 2014/0292589 A1 Oct. 2, 2014

(30) **Foreign Application Priority Data**

Mar. 28, 2013 (KR) 10-2013-0033475

(51) **Int. Cl.**
H01Q 1/24 (2006.01)
H01Q 1/38 (2006.01)

(52) **U.S. Cl.**
CPC ***H01Q 1/243*** (2013.01); ***H01Q 1/38*** (2013.01)

(58) **Field of Classification Search**
CPC H01C 1/243; H01C 1/38
USPC 343/702
See application file for complete search history.

(56) **References Cited**

U.S. PATENT DOCUMENTS

2008/0136716 A1* 6/2008 Annamaa H01Q 1/22 343/702
2009/0167631 A1* 7/2009 Tai H01Q 1/22 343/906
2011/0115679 A1* 5/2011 Kong H01Q 1/243 343/702
2011/0193752 A1* 8/2011 Wang H01Q 1/243 343/702
2012/0182201 A1* 7/2012 Guo G06K 19/07 343/906
2012/0280989 A1 11/2012 Birtwistle et al.

* cited by examiner

Primary Examiner — Dameon E Levi
Assistant Examiner — Walter Davis
(74) *Attorney, Agent, or Firm* — Cha & Reiter, LLC

(57) **ABSTRACT**

An antenna device of a portable device such as a smartphone includes a connecting member having a conductive case and mounted on a circuit board of the portable device in a manner such that the case is connected to a ground surface of the circuit board; a radiator spaced from the circuit board; and at least one connecting pin provided between the case and the radiator. The radiator is connected to the ground surface through the connecting pin and the case. The antenna device advantageously may be easily installed in the internal space of a miniaturized, lightened and/or slimmed portable device by practically using a conductive component, e.g., the case, of the connecting member.

16 Claims, 7 Drawing Sheets

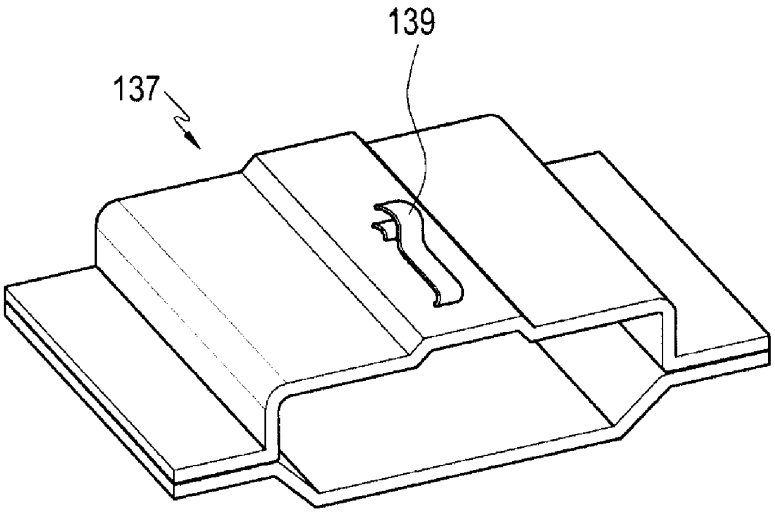

US009647323B2

(12) **United States Patent**
Lee et al.

(10) **Patent No.: US 9,647,323 B2**
(45) **Date of Patent: May 9, 2017**

(54) **ELECTRONIC DEVICE WITH ANTENNA HAVING RING-TYPE STRUCTURE**

(71) Applicant: **Samsung Electronics Co., Ltd.**, Gyeonggi-do (KR)

(72) Inventors: **Woo-Sup Lee**, Gyeonggi-do (KR); **Gyu-Sub Kim**, Seoul (KR); **Yeon-Woo Kim**, Gyeonggi-do (KR); **Jung-Sik Park**, Gyeonggi-do (KR)

(73) Assignee: **Samsung Electronics Co., Ltd.**, Yeongtong-gu, Suwon-si, Gyeonggi-do (KR)

(*) Notice: Subject to any disclaimer, the term of this patent is extended or adjusted under 35 U.S.C. 154(b) by 7 days.

(21) Appl. No.: **14/737,825**

(22) Filed: **Jun. 12, 2015**

(65) **Prior Publication Data**

US 2015/0372372 A1 Dec. 24, 2015

(30) **Foreign Application Priority Data**

Jun. 23, 2014 (KR) 10-2014-0076496

(51) **Int. Cl.**
H01Q 1/24 (2006.01)
H01Q 9/42 (2006.01)
H01Q 9/04 (2006.01)

(52) **U.S. Cl.**
CPC ***H01Q 1/243*** (2013.01); ***H01Q 9/42*** (2013.01); *H01Q 9/0421* (2013.01)

(58) **Field of Classification Search**
CPC H01Q 9/0464; H01Q 19/005; H01Q 1/243; H01Q 9/42; H01Q 9/0421
USPC 343/711, 702
See application file for complete search history.

(56) **References Cited**

U.S. PATENT DOCUMENTS

6,697,024	B2 *	2/2004	Fuerst	B60C 23/0444 343/711
2011/0136447	A1	6/2011	Pascolini et al.	
2012/0175165	A1	7/2012	Merz et al.	
2012/0195011	A1 *	8/2012	Wong	H01Q 9/0421 361/752
2014/0111388	A1 *	4/2014	Di Nallo	H01Q 1/2266 343/702
2014/0132456	A1 *	5/2014	Wang	H01Q 1/242 343/702
2014/0354491	A1 *	12/2014	Kim	H01Q 1/243 343/702

FOREIGN PATENT DOCUMENTS

CN 104064866 * 9/2014

* cited by examiner

Primary Examiner — Jean B Jeanglaude
(74) *Attorney, Agent, or Firm* — Cha & Reiter, LLC

(57) **ABSTRACT**

In one embodiment, an electronic device including an antenna with a ring-type structure is disclosed. The electronic device includes a metal bracket and the antenna. The antenna includes a first metal ring surrounding the metal bracket, where the first metal ring has at least two sections separated by at least one gap. At least one section may operate as a radiator through radio frequency (RF) feeding at least at one portion thereof. A second metal ring may be electrically connected, at least at one point thereof, to a ground of the electronic device or to the first metal ring. At least one section of the first metal ring may operate as a monopole antenna, as a PIFA antenna, or as a loop antenna, via suitable feeding.

19 Claims, 9 Drawing Sheets

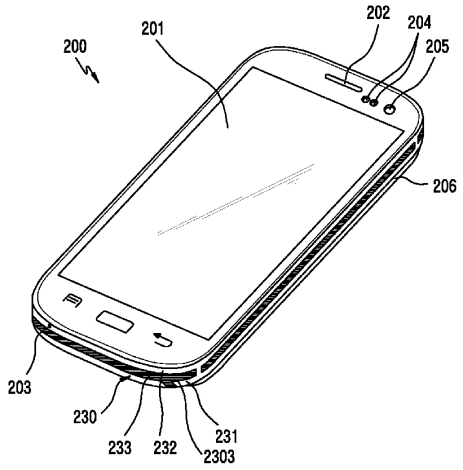

US009647332B2

(12) **United States Patent**
Han et al.

(10) **Patent No.: US 9,647,332 B2**
(45) **Date of Patent: May 9, 2017**

(54) **ELECTRONIC DEVICE ANTENNA WITH INTERFERENCE MITIGATION CIRCUITRY**

(71) Applicant: **Apple Inc.**, Cupertino, CA (US)

(72) Inventors: **Liang Han**, Sunnyvale, CA (US); **Ming-Ju Tsai**, Cupertino, CA (US); **Matthew A. Mow**, Los Altos, CA (US); **Yijun Zhou**, Sunnyvale, CA (US); **Mattia Pascolini**, San Francisco, CA (US); **Salih Yarga**, Sunnyvale, CA (US); **Enrique Ayala Vazquez**, Watsonville, CA (US); **Hongfei Hu**, Santa Clara, CA (US); **Xu Han**, San Jose, CA (US); **Robert W. Schlub**, Cupertino, CA (US)

(73) Assignee: **Apple Inc.**, Cupertino, CA (US)

(*) Notice: Subject to any disclaimer, the term of this patent is extended or adjusted under 35 U.S.C. 154(b) by 314 days.

(21) Appl. No.: **14/476,453**

(22) Filed: **Sep. 3, 2014**

(65) **Prior Publication Data**

US 2016/0064812 A1 Mar. 3, 2016

(51) **Int. Cl.**

H01Q 1/52	(2006.01)
H01Q 1/22	(2006.01)
H01Q 1/50	(2006.01)
H01Q 1/24	(2006.01)
H01Q 9/42	(2006.01)
H01Q 13/10	(2006.01)
H01Q 21/28	(2006.01)

(52) **U.S. Cl.**

CPC ***H01Q 1/52*** (2013.01); ***H01Q 1/22*** (2013.01); ***H01Q 1/243*** (2013.01); ***H01Q 1/50*** (2013.01); ***H01Q 9/42*** (2013.01); ***H01Q 13/10*** (2013.01); ***H01Q 21/28*** (2013.01)

(58) **Field of Classification Search**

CPC H01Q 1/52; H01Q 1/50; H01Q 1/22
USPC 343/702
See application file for complete search history.

(56) **References Cited**

U.S. PATENT DOCUMENTS

7,896,672 B2	3/2011	Felisilda De La Cruz
8,682,275 B2	3/2014	Kerth et al.

(Continued)

FOREIGN PATENT DOCUMENTS

JP	2012-029281	2/2012
KR	10-2012-0087899	8/2012
WO	2014105075	7/2014

Primary Examiner — Dameon E Levi
Assistant Examiner — Andrea Lindgren Baltzell
(74) *Attorney, Agent, or Firm* — Treyz Law Group, P.C.; G. Victor Treyz; Joseph F. Guihan

(57) **ABSTRACT**

An electronic device may be provided with an antenna. The antenna may have an antenna resonating element and an antenna ground. The antenna resonating element may be formed from peripheral conductive housing structures. An audio jack or other connector may be mounted in an opening in the peripheral conductive housing structures. The audio jack may overlap the antenna ground. Contacts in the audio jack may be coupled to an interference mitigation circuit. The interference mitigation circuit may include capacitors coupled to the ground and inductors coupled between the contacts and the capacitors. Radio-frequency signal blocking inductors may be coupled between the interference mitigation circuit and respective ports in an audio circuit.

21 Claims, 12 Drawing Sheets

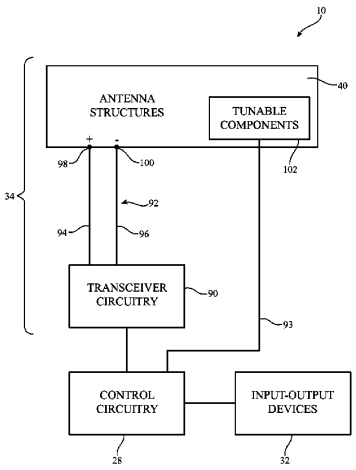

US009647337B1

(12) **United States Patent**
Kuo

(10) **Patent No.: US 9,647,337 B1**
(45) **Date of Patent: May 9, 2017**

(54) **DUAL-BAND ANTENNA WITH GROUNDED PATCH AND COUPLED FEED**

(71) Applicant: **Amazon Technologies, Inc.**, Seattle, WA (US)

(72) Inventor: **Jerry Weiming Kuo**, San Jose, CA (US)

(73) Assignee: **Amazon Technologies, Inc.**, Seattle, WA (US)

(*) Notice: Subject to any disclaimer, the term of this patent is extended or adjusted under 35 U.S.C. 154(b) by 194 days.

(21) Appl. No.: **14/577,585**

(22) Filed: **Dec. 19, 2014**

(51) **Int. Cl.**
H01Q 1/24 (2006.01)
H01Q 5/328 (2015.01)
H01Q 5/364 (2015.01)
H01Q 5/335 (2015.01)

(52) **U.S. Cl.**
CPC ***H01Q 5/328*** (2015.01); ***H01Q 5/335*** (2015.01); ***H01Q 5/364*** (2015.01)

(58) **Field of Classification Search**
CPC H01Q 1/243; H01Q 9/0421; H01Q 9/42; H01Q 5/371; H01Q 5/357; H01Q 5/378; H01Q 1/36; H01Q 5/50; H01Q 9/26; H01Q 19/005
USPC ..... 343/702, 700 MS, 846, 848, 876
See application file for complete search history.

(56) **References Cited**

U.S. PATENT DOCUMENTS

7,161,543 B2 * 1/2007 Cheng ..... G06F 1/1616 343/700 MS
8,754,817 B1 * 6/2014 Kuo ..... H01Q 1/243 343/700 MS
2003/0112195 A1 * 6/2003 Cheng H01Q 9/42 343/767
2004/0075611 A1 * 4/2004 Kenoun H01Q 1/243 343/702
2005/0243006 A1 * 11/2005 Lin H01Q 9/0421 343/770
2006/0132360 A1 * 6/2006 Caimi ..... H01Q 1/243 343/700 MS
2007/0164904 A1 * 7/2007 Nahar ..... H01Q 1/22 343/700 MS
2007/0222697 A1 * 9/2007 Caimi H01Q 1/243 343/861
2008/0111745 A1 * 5/2008 Takada ..... H01Q 1/243 343/700 MS
2010/0053007 A1 * 3/2010 Ni H01Q 9/0421 343/745
2014/0111382 A1 * 4/2014 Lee ..... H01Q 5/357 343/700 MS
2014/0292587 A1 * 10/2014 Yarga H01Q 1/243 343/702
2015/0214626 A1 * 7/2015 Liu H01Q 9/145 343/852

* cited by examiner

Primary Examiner — Linh Nguyen
(74) *Attorney, Agent, or Firm* — Lowenstein Sandler LLP

(57) **ABSTRACT**

Methods and systems for radiating electromagnetic energy with a patch antenna structure are described. A device may include a radio frequency (RF) feed and an antenna structure coupled to the RF feed. The antenna structure may include a ground plane, first and second conductors, and first and second impedance matching components. The first conductor may include an inner surface defining and at least partially surrounding a slot. The first and second impedance matching components may be coupled between the RF feed and the ground plane.

20 Claims, 10 Drawing Sheets

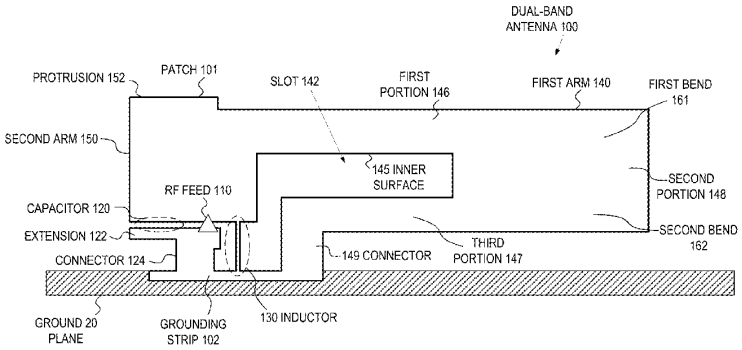

US009653777B2

(12) **United States Patent**
Guterman et al.

(10) **Patent No.: US 9,653,777 B2**
(45) **Date of Patent: May 16, 2017**

(54) **ELECTRONIC DEVICE WITH ISOLATED CAVITY ANTENNAS**

(71) Applicant: **Apple Inc.**, Cupertino, CA (US)

(72) Inventors: **Jerzy Guterman**, Mountain View, CA (US); **Edward T. Sweet**, San Francisco, CA (US); **Huan-Chu Huang**, Luzhu (TW); **Daniel K. Boothe**, San Francisco, CA (US)

(73) Assignee: **APPLE INC.**, Cupertino, CA (US)

(*) Notice: Subject to any disclaimer, the term of this patent is extended or adjusted under 35 U.S.C. 154(b) by 67 days.

(21) Appl. No.: **14/640,787**

(22) Filed: **Mar. 6, 2015**

(65) **Prior Publication Data**

US 2016/0261022 A1 Sep. 8, 2016

(51) **Int. Cl.**
H01Q 1/22 (2006.01)
H01Q 1/24 (2006.01)
(Continued)

(52) **U.S. Cl.**
CPC ***H01Q 1/2266*** (2013.01); ***G06F 1/1698*** (2013.01); ***H01Q 1/243*** (2013.01);
(Continued)

(58) **Field of Classification Search**
CPC H01Q 13/06; H01Q 13/18; H01Q 3/16; H01Q 3/20; H01Q 3/2664; H01Q 3/44;
(Continued)

(56) **References Cited**

U.S. PATENT DOCUMENTS

3,918,062 A * 11/1975 Haruki H01Q 7/00 343/702
4,509,056 A 4/1985 Ploussios
(Continued)

FOREIGN PATENT DOCUMENTS

CN 201533015 U 7/2010
CN 102544699 A 7/2012
(Continued)

OTHER PUBLICATIONS

"AirPort Product-Specific Details", AirPort Developer Note, [Online], Updated: Apr. 28, 2008, Retrieved: Sep. 25, 2008, <http://developer.apple.com/documentation/HardwareDrivers/Conceptual/Hwrech_AirportjArticles/ ElAirP_implementation.html>.
(Continued)

Primary Examiner — Tho G Phan
Assistant Examiner — Patrick Holecek
(74) *Attorney, Agent, or Firm* — Treyz Law Group, P.C.; G. Victor Treyz; Michael H Lyons

(57) **ABSTRACT**

An electronic device may have a metal housing. The metal housing may have an upper housing in which a component such as a display is mounted and a lower housing in which a component such as a keyboard is mounted. Hinges may be used to mount the upper housing to the lower housing for rotation about a rotational axis. A slot-shaped opening may separate the upper and lower housing. A flexible printed circuit with ground traces may bisect the slot-shaped opening to form first and second slots. Cavity antennas may be aligned with the slots. Each cavity antenna may include a hollow carrier with a pair of speakers. The speakers may have ports that emit sound through aligned openings in the lower housing. Conductive gaskets surrounding the ports may acoustically seal the speaker ports while shorting the cavity antenna to the lower housing.

24 Claims, 16 Drawing Sheets

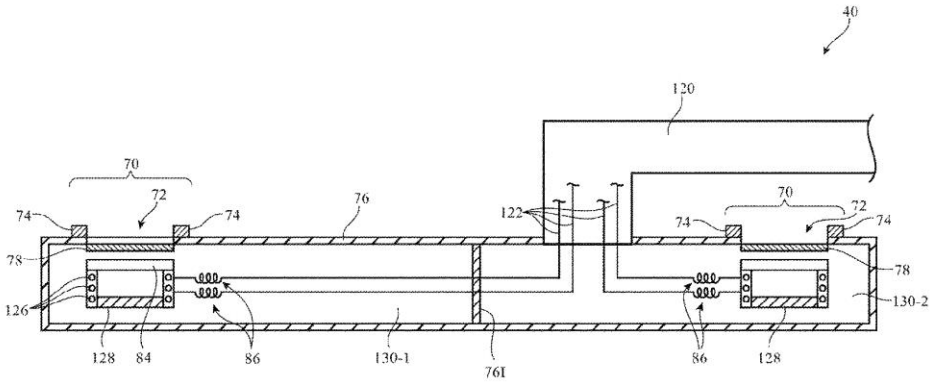

US009653779B2

(12) **United States Patent**
Wang et al.

(10) **Patent No.: US 9,653,779 B2**
(45) **Date of Patent: May 16, 2017**

(54) **DUAL-BAND LTE MIMO ANTENNA**

(75) Inventors: **Dong Wang**, Waterloo (CA); **James Paul Warden**, Ft. Worth, TX (US)

(73) Assignee: **BlackBerry Limited**, Waterloo, Ontario (CA)

(*) Notice: Subject to any disclaimer, the term of this patent is extended or adjusted under 35 U.S.C. 154(b) by 631 days.

(21) Appl. No.: **13/551,913**

(22) Filed: **Jul. 18, 2012**

(65) **Prior Publication Data**

US 2014/0023123 A1 Jan. 23, 2014

(51) **Int. Cl.**

H01Q 1/24	(2006.01)
H01Q 1/38	(2006.01)
H01Q 9/04	(2006.01)
H01Q 9/42	(2006.01)
H01Q 21/28	(2006.01)
H01Q 21/30	(2006.01)
H01Q 5/371	(2015.01)

(52) **U.S. Cl.**

CPC ***H01Q 1/243*** (2013.01); ***H01Q 1/38*** (2013.01); ***H01Q 5/371*** (2015.01); ***H01Q 9/0407*** (2013.01); ***H01Q 9/42*** (2013.01); ***H01Q 21/28*** (2013.01); ***H01Q 21/30*** (2013.01)

(58) **Field of Classification Search**

CPC H01Q 1/243; H01Q 5/371; H01Q 1/38; H01Q 9/0407; H01Q 9/42; H01Q 21/28; H01Q 21/30

USPC ..... 343/893, 844, 700 MS

See application file for complete search history.

(56) **References Cited**

U.S. PATENT DOCUMENTS

6,515,627	B2 *	2/2003	Lopez	H01Q 1/243 343/700 MS
2005/0128162	A1	6/2005	Takagi et al.	
2005/0195110	A1	9/2005	Lin et al.	
2010/0194642	A1 *	8/2010	Rao et al.	343/700 MS

(Continued)

FOREIGN PATENT DOCUMENTS

CN	1627558	A	6/2005
CN	1934748	A	3/2007
CN	101114732	A	1/2008

(Continued)

OTHER PUBLICATIONS

Extended European Search Report on European Application No. 13173970.8-1811, issued Dec. 12, 2013; 7 pages.

(Continued)

Primary Examiner — Graham Smith
Assistant Examiner — Jae Kim
(74) *Attorney, Agent, or Firm* — Conley Rose, P.C.; J. Robert Brown, Jr.

(57) **ABSTRACT**

A multiple-input-multiple output antenna for use with wireless communication comprises a first element a first radiation element operable to resonate at a first frequency and a second radiation element operable to resonate at a second frequency, wherein the second frequency is not an integer multiple of the first frequency. The first and second antenna radiation elements are each proximate to a ground plane and the respective resonance frequencies of the first radiation element and the second radiation element is achieved by controlling the electrical coupling between the first radiation element, the second radiation element and the ground plane and the resonance frequencies of the first and second radiation elements is controlled independently.

19 Claims, 5 Drawing Sheets

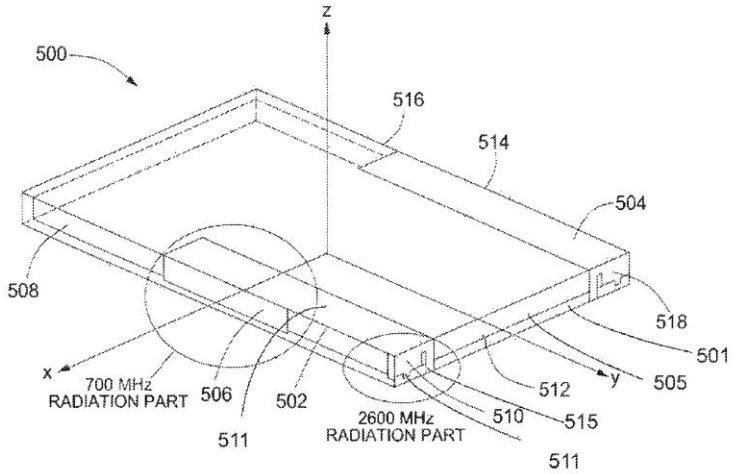

US009653782B2

(12) **United States Patent**
Chen et al.

(10) **Patent No.: US 9,653,782 B2**
(45) **Date of Patent: May 16, 2017**

(54) **ANTENNA STRUCTURE AND WIRELESS COMMUNICATION DEVICE USING SAME**

(71) Applicant: **Chiun Mai Communication Systems, Inc.**, New Taipei (TW)

(72) Inventors: **Jin-Bo Chen**, New Taipei (TW); **Cheng-An Chen**, New Taipei (TW); **Wen-Yuan Chen**, New Taipei (TW); **Sheng-Chieh Liang**, New Taipei (TW)

(73) Assignee: **Chiun Mai Communication Systems, Inc.**, New Taipei (TW)

(*) Notice: Subject to any disclaimer, the term of this patent is extended or adjusted under 35 U.S.C. 154(b) by 85 days.

(21) Appl. No.: **14/687,431**

(22) Filed: **Apr. 15, 2015**

(65) **Prior Publication Data**

US 2016/0181694 A1 Jun. 23, 2016

(30) **Foreign Application Priority Data**

Dec. 23, 2014 (CN) 2014 1 0807376

(51) **Int. Cl.**

H01Q 1/24	(2006.01)
H01Q 5/371	(2015.01)
H01Q 5/378	(2015.01)

(52) **U.S. Cl.**
CPC ***H01Q 1/243*** (2013.01); ***H01Q 5/371*** (2015.01); ***H01Q 5/378*** (2015.01)

(58) **Field of Classification Search**
CPC H01Q 1/243; H01Q 5/371; H01Q 5/378
USPC 343/702
See application file for complete search history.

(56) **References Cited**

U.S. PATENT DOCUMENTS

2011/0001673 A1*	1/2011	You	.....	H01Q 1/243 343/702
2011/0156960 A1*	6/2011	Tseng	.....	H01Q 1/243 343/700 MS

* cited by examiner

Primary Examiner — Dieu H Duong
(74) *Attorney, Agent, or Firm* — Steven Reiss

(57) **ABSTRACT**

An antenna structure includes an antenna holder, a feed unit, a grounding unit, a first radiating unit, a second radiating unit, a third radiating unit, a parasitic unit, and a coupling unit. The feed unit and the grounding unit are positioned on the antenna holder and are spaced apart from each other. The first radiating unit and the third radiating unit are both electrically connected to the feed unit. The parasitic unit is electrically connected to the grounding unit. The first radiating unit couples with the second radiating unit and the parasitic unit. The second radiating unit further couples with the coupling unit and is grounded through the coupling unit.

16 Claims, 4 Drawing Sheets

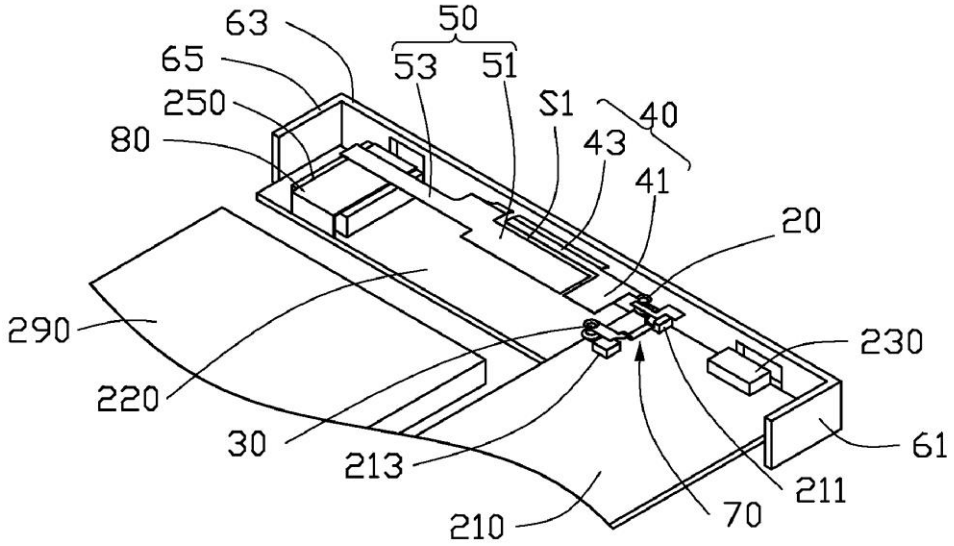

US009653783B2

(12) **United States Patent**
Nickel et al.

(10) **Patent No.: US 9,653,783 B2**
(45) **Date of Patent: *May 16, 2017**

(54) **MULTIBAND ANTENNAS FORMED FROM BEZEL BANDS WITH GAPS**

(71) Applicant: **Apple Inc.**, Cupertino, CA (US)

(72) Inventors: **Joshua G. Nickel**, San Jose, CA (US); **Juan Zavala**, Watsonville, CA (US); **Yijun Zhou**, Sunnyvale, CA (US); **Mattia Pascolini**, San Francisco, CA (US); **Robert W. Schlub**, Cupertino, CA (US); **Ruben Caballero**, San Jose, CA (US)

(73) Assignee: **Apple Inc.**, Cupertino, CA (US)

(*) Notice: Subject to any disclaimer, the term of this patent is extended or adjusted under 35 U.S.C. 154(b) by 0 days.

This patent is subject to a terminal disclaimer.

(21) Appl. No.: **14/830,227**

(22) Filed: **Aug. 19, 2015**

(65) **Prior Publication Data**

US 2015/0357703 A1 Dec. 10, 2015

Related U.S. Application Data

(63) Continuation of application No. 12/752,966, filed on Apr. 1, 2010.

(51) **Int. Cl.**
H01Q 1/38 (2006.01)
H01Q 1/24 (2006.01)
(Continued)

(52) **U.S. Cl.**
CPC ***H01Q 1/243*** (2013.01); ***H01Q 1/48*** (2013.01); ***H01Q 5/364*** (2015.01); ***H01Q 9/0421*** (2013.01); ***H01Q 9/42*** (2013.01)

(58) **Field of Classification Search**
CPC H01Q 1/243; H01Q 9/0421; H01Q 9/42; H01Q 5/364
See application file for complete search history.

(56) **References Cited**

U.S. PATENT DOCUMENTS

2,942,263 A 6/1960 Baldwin
3,394,373 A 7/1968 Makrancy
(Continued)

FOREIGN PATENT DOCUMENTS

CN 1292583 4/2001
CN 1216438 8/2005
(Continued)

OTHER PUBLICATIONS

Antenna Theory: A Review, Balanis, Proc. IEEE vol. 80 No. 1 Jan. 1992.*
U.S. Appl. No. 60/833,587, filed Jan. 5, 2007, Hobson et al.

Primary Examiner — Robert Karacsony
Assistant Examiner — Amal Patel
(74) *Attorney, Agent, or Firm* — Treyz Law Group, P.C.; G. Victor Treyz; Michael H. Lyons

(57) **ABSTRACT**

Electronic devices are provided that contain wireless communications circuitry. The wireless communications circuitry may include radio-frequency transceiver circuitry and antenna structures. An inverted-F antenna may have first and second short circuit legs and a feed leg. The first and second short circuit legs and the feed leg may be connected to a folded antenna resonating element arm. The antenna resonating element arm and the first short circuit leg may be formed from portions of a conductive electronic device bezel. The folded antenna resonating element arm may have a bend. The bezel may have a gap that is located at the bend. Part of the folded resonating element arm may be formed from a conductive trace on a dielectric member. A spring may be used in connecting the conductive trace to the electronic device bezel portion of the antenna resonating element arm.

15 Claims, 10 Drawing Sheets

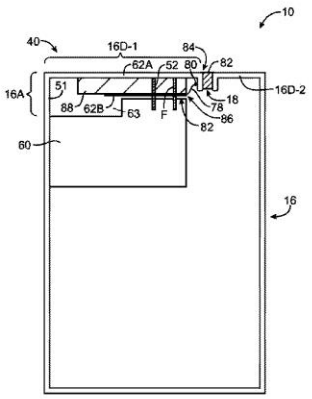

US009653789B2

(12) **United States Patent**
Wolf et al.

(10) **Patent No.: US 9,653,789 B2**
(45) **Date of Patent: May 16, 2017**

(54) **ANTENNA HAVING PLANAR CONDUCTING ELEMENTS, ONE OF WHICH HAS A SLOT**

(75) Inventors: **Forrest D. Wolf**, Reno, NV (US); **Claude Jean Michel Laurent**, Aalborg (DK)

(73) Assignee: **AirWire Technologies**, Reno, NV (US)

(*) Notice: Subject to any disclaimer, the term of this patent is extended or adjusted under 35 U.S.C. 154(b) by 1236 days.

(21) Appl. No.: **12/755,294**

(22) Filed: **Apr. 6, 2010**

(65) **Prior Publication Data**

US 2011/0241944 A1 Oct. 6, 2011

(51) **Int. Cl.**

H01Q 1/24	(2006.01)
H01Q 1/38	(2006.01)
H01Q 9/28	(2006.01)
H01Q 5/20	(2015.01)

(52) **U.S. Cl.**

CPC ***H01Q 1/38*** (2013.01); ***H01Q 1/243*** (2013.01); ***H01Q 5/20*** (2015.01); ***H01Q 9/285*** (2013.01)

(58) **Field of Classification Search**

CPC H01Q 1/38; H01Q 9/285; H01Q 1/243; H01Q 5/001; H01Q 5/20

USPC ..... 343/700 MS, 702, 795, 829, 846

See application file for complete search history.

(56) **References Cited**

U.S. PATENT DOCUMENTS

4,825,220 A *	4/1989	Edward	H01Q 9/285	343/700 MS
5,532,708 A *	7/1996	Krenz	H01Q 9/40	343/795
6,018,324 A	1/2000	Kitchener		
6,624,793 B1	9/2003	Su et al.		
6,806,842 B2 *	10/2004	King	B65D 5/4233	340/572.8
6,956,536 B2 *	10/2005	Lee	H01Q 1/38	343/700 MS
7,095,374 B2 *	8/2006	Chen	G06F 1/1616	343/700 MS

(Continued)

FOREIGN PATENT DOCUMENTS

CN	2735559 Y	10/2005
WO	2008079066 A1	7/2008

OTHER PUBLICATIONS

Jeon et al. "Dual-band slot-coupled dipole antenna for 900MHz and 2.45 GHz RFID tag application" IEEE Electronic Letters, vol. 42, No. 22, pp. 1259-1260, Oct. 26, 2006.*

(Continued)

Primary Examiner — Tho G. Phan

(57) **ABSTRACT**

An antenna includes a dielectric material having a first side opposite a second side, and a conductive via therein. A first planar conducting element is on the first side of the dielectric material and has at least one closed slot therein, and an electrical connection to the conductive via. A second planar conducting element is on the first side of the dielectric material. Each of the first and second planar conducting elements is positioned adjacent a gap that electrically isolates the first planar conducting element from the second planar conducting element. An electrical microstrip feed line is on the second side of the dielectric material, is electrically connected to the conductive via, and has a route extending from the conductive via, to across the gap, to under the second planar conducting element. The second planar conducting element provides a reference plane for the electrical microstrip feed line.

23 Claims, 7 Drawing Sheets

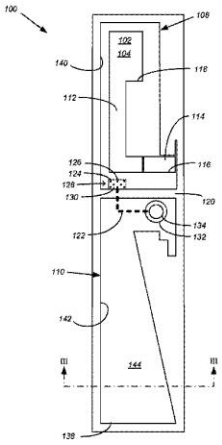

US009653791B2

(12) **United States Patent**
Yamagajo

(10) **Patent No.: US 9,653,791 B2**
(45) **Date of Patent: May 16, 2017**

(54) **ANTENNA DEVICE AND COMMUNICATION DEVICE**

(71) Applicant: **FUJITSU LIMITED**, Kawasaki-shi, Kanagawa (JP)

(72) Inventor: **Takashi Yamagajo**, Yokosuka (JP)

(73) Assignee: **FUJITSU LIMITED**, Kawasaki (JP)

(*) Notice: Subject to any disclaimer, the term of this patent is extended or adjusted under 35 U.S.C. 154(b) by 318 days.

(21) Appl. No.: **14/033,105**

(22) Filed: **Sep. 20, 2013**

(65) **Prior Publication Data**

US 2014/0091978 A1 Apr. 3, 2014

(30) **Foreign Application Priority Data**

Sep. 28, 2012 (JP) 2012-218520

(51) **Int. Cl.**
H01Q 1/24 (2006.01)
H01Q 1/50 (2006.01)
(Continued)

(52) **U.S. Cl.**
CPC ***H01Q 1/50*** (2013.01); ***H01Q 1/243*** (2013.01); ***H01Q 1/36*** (2013.01); ***H01Q 5/335*** (2015.01);
(Continued)

(58) **Field of Classification Search**
CPC H01Q 5/335; H01Q 5/378; H01Q 1/50; H01Q 9/40; H01Q 1/243; H01Q 9/42; H01Q 1/36
See application file for complete search history.

(56) **References Cited**

U.S. PATENT DOCUMENTS

4,083,046 A * 4/1978 Kaloi ..... H01Q 9/0407 343/700 MS
8,334,810 B2 * 12/2012 Foo ..... H01Q 1/42 343/700 MS
(Continued)

FOREIGN PATENT DOCUMENTS

JP 2005-210520 A 8/2005
JP 2005-252526 A 9/2005
(Continued)

OTHER PUBLICATIONS

Office Action of Japanese Patent Application No. 2012-218520 dated Feb. 9, 2016 with partial translation.

Primary Examiner — Graham Smith
Assistant Examiner — Noel Maldonado
(74) *Attorney, Agent, or Firm* — Arent Fox LLP

(57) **ABSTRACT**

An antenna device includes a substrate, a first antenna element disposed on a surface of the substrate, a second antenna element disposed on the surface of the substrate, the second antenna element being a linear shape, a length of the second antenna element being shorter than twice a length of a side that determines a lowest operating frequency of the first antenna element, a grounding conductor disposed so as not to overlap with the first antenna element and the second antenna element, a feeder coupled to the first antenna element, a first switch and a second switch disposed at the feeder wire, a first matching element and a second matching element disposed between the feeder wire and the grounding conductor, respectively, a third switch configured to switch connecting states of the first antenna element and the second antenna element.

24 Claims, 27 Drawing Sheets

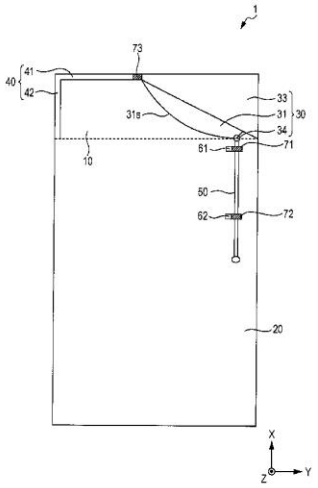

US009653794B2

(12) **United States Patent**
Lin

(10) **Patent No.: US 9,653,794 B2**
(45) **Date of Patent: May 16, 2017**

(54) **BROADBAND ANTENNA AND WIRELESS COMMUNICATION DEVICE EMPLOYING SAME**

(71) Applicant: **Chiun Mai Communication Systems, Inc.**, New Taipei (TW)

(72) Inventor: **Yen-Hui Lin**, New Taipei (TW)

(73) Assignee: **Chiun Mai Communication Systems, Inc.**, New Taipei (TW)

(*) Notice: Subject to any disclaimer, the term of this patent is extended or adjusted under 35 U.S.C. 154(b) by 156 days.

(21) Appl. No.: **14/464,163**

(22) Filed: **Aug. 20, 2014**

(65) **Prior Publication Data**

US 2015/0054708 A1 Feb. 26, 2015

(30) **Foreign Application Priority Data**

Aug. 22, 2013 (CN) 2013 1 0369616

(51) **Int. Cl.**

H01Q 1/48	(2006.01)
H01Q 1/50	(2006.01)
H01Q 9/04	(2006.01)
H01Q 5/371	(2015.01)

(52) **U.S. Cl.**

CPC ***H01Q 1/50*** (2013.01); ***H01Q 1/48*** (2013.01); ***H01Q 5/371*** (2015.01); ***H01Q 9/045*** (2013.01)

(58) **Field of Classification Search**

CPC H01Q 1/38; H01Q 1/48; H01Q 9/0421; H01Q 1/243

USPC ..... 343/846, 702, 700 MS, 845

See application file for complete search history.

(56) **References Cited**

U.S. PATENT DOCUMENTS

8,890,753	B1 *	11/2014	Lee	H01Q 1/243 343/702
2010/0164835	A1 *	7/2010	Tai	H01Q 1/1207 343/906
2012/0162038	A1 *	6/2012	Lee	H01Q 5/357 343/749
2012/0327621	A1 *	12/2012	Rhyu	H01Q 7/00 361/760

* cited by examiner

Primary Examiner — Dameon E Levi
Assistant Examiner — Collin Dawkins
(74) *Attorney, Agent, or Firm* — Steven Reiss

(57) **ABSTRACT**

A broadband antenna is mounted aside a metal electronic element and includes a feeding portion, a first connecting portion, a second connecting portion, a coupling portion, and a ground portion. The first radiating portion and the second radiating portion are both connected perpendicular to the feeding portion. The coupling portion is spaced from the first radiating portion and the second connecting portion. The ground portion is connected perpendicular to a middle portion of the coupling portion and adjacent to the metal electronic element. These portions cooperatively use a low frequency mode and a high frequency mode. The ground portion increases an inductance performance of the broadband antenna, thereby decreasing interference caused by the metal electronic elements. A wireless communication device employing the broadband antenna is also disclosed.

10 Claims, 5 Drawing Sheets

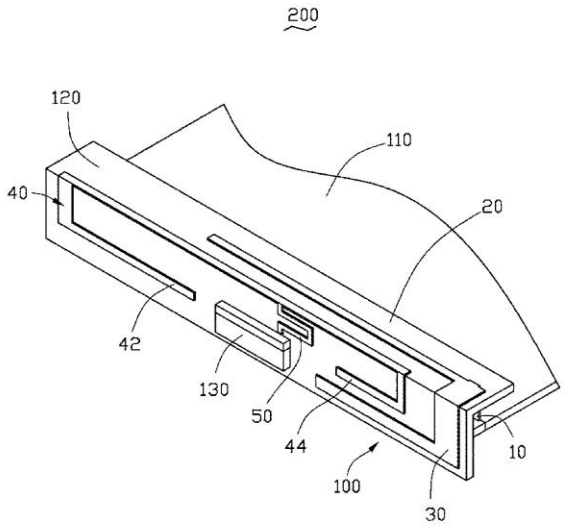

US009653809B2

(12) **United States Patent**
Chen et al.

(10) **Patent No.: US 9,653,809 B2**
(45) **Date of Patent: May 16, 2017**

(54) **ANTENNA MODULE AND ANTENNA THEREOF**

(71) Applicants: **Universal Scientific Industrial (Shanghai) Co., Ltd**, Shanghai (CN); **Universal Global Scientific Industrial Co., Ltd**, Caotun Township, Nantou County (TW)

(72) Inventors: **Hsin-Hong Chen**, Taichung (TW); **Jui-Kun Shih**, Caotun Township, Nantou County (TW); **Chung-Hsin Chiang**, Nantou (TW)

(73) Assignees: **Universal Scientific Industrial (Shanghai) Co., Ltd.**, Shanghai (CN); **Universal Global Scientific Industrial Co., Ltd.**, Caotun Township, Nantou County (TW)

(*) Notice: Subject to any disclaimer, the term of this patent is extended or adjusted under 35 U.S.C. 154(b) by 173 days.

(21) Appl. No.: **14/064,795**

(22) Filed: **Oct. 28, 2013**

(65) **Prior Publication Data**

US 2015/0061940 A1 Mar. 5, 2015

(30) **Foreign Application Priority Data**

Aug. 30, 2013 (TW) ..... 102131364 A

(51) **Int. Cl.**
H01Q 9/04 (2006.01)
H01Q 1/24 (2006.01)

(52) **U.S. Cl.**
CPC ***H01Q 9/0421*** (2013.01); ***H01Q 1/243*** (2013.01)

(58) **Field of Classification Search**
None
See application file for complete search history.

(56) **References Cited**

U.S. PATENT DOCUMENTS

6,853,335	B1	2/2005	Yeh	
7,443,357	B2	10/2008	Mei	
2004/0056804	A1*	3/2004	Kadambi	H01Q 1/243 343/700 MS
2004/0090377	A1*	5/2004	Dai	H01Q 1/22 343/700 MS
2009/0128416	A1*	5/2009	Cheng	343/700 MS
2012/0044111	A1	2/2012	Nagoshi et al.	

* cited by examiner

Primary Examiner — Robert Karacsony
(74) *Attorney, Agent, or Firm* — Muncy, Geissler, Olds & Lowe, P.C.

(57) **ABSTRACT**

The present invention provides an antenna module and an antenna thereof. The antenna includes a first radiation element, a second radiation element, a third radiation element, and a short-circuit portion. The second radiation element has one end connected with the first radiation element. The third radiation element connected with the other end of the second radiation element, and includes a first connection section, a second connection section, and a third connection section. The first connection section is perpendicular to the second radiation element. The second connection section connected with the first connection section. The third connection section is connected with the second connection section and located at an internal side of the second connection section. The short-circuit portion connected with the second connection section and located at an external side of the second connection portion.

11 Claims, 3 Drawing Sheets

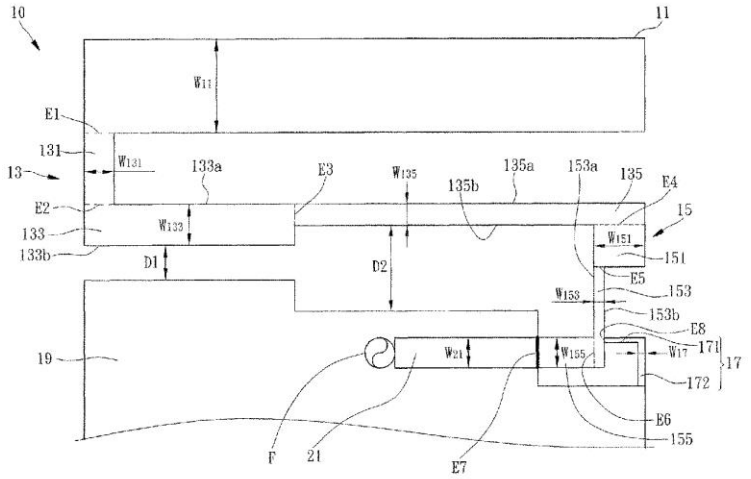

US009653813B2

(12) **United States Patent**
Smith et al.

(10) **Patent No.: US 9,653,813 B2**
(45) **Date of Patent: May 16, 2017**

(54) **DIAGONALLY-DRIVEN ANTENNA SYSTEM AND METHOD**

(75) Inventors: **Hugh K. Smith**, Palatine, IL (US); **Eric L. Krenz**, Crystal Lake, IL (US); **Karan J. Jumani**, Palatine, IL (US); **Andrew A. Efanov**, Crystal Lake, IL (US)

(73) Assignee: **Google Technology Holdings LLC**, Mountain View, CA (US)

(*) Notice: Subject to any disclaimer, the term of this patent is extended or adjusted under 35 U.S.C. 154(b) by 1209 days.

(21) Appl. No.: **13/107,560**

(22) Filed: **May 13, 2011**

(65) **Prior Publication Data**

US 2012/0287011 A1 Nov. 15, 2012

(51) **Int. Cl.**

H01Q 21/00	(2006.01)
H01Q 9/42	(2006.01)
H01Q 9/04	(2006.01)
H01Q 21/28	(2006.01)

(52) **U.S. Cl.**

CPC ***H01Q 9/42*** (2013.01); ***H01Q 9/0421*** (2013.01); ***H01Q 21/28*** (2013.01)

(58) **Field of Classification Search**

USPC 343/850, 853, 855

See application file for complete search history.

(56) **References Cited**

U.S. PATENT DOCUMENTS

4,103,303 A * 7/1978 Regenos et al. 342/368
4,293,955 A 10/1981 Gehr et al.
4,571,595 A 2/1986 Phillips et al.
4,575,725 A 3/1986 Tresselt
4,613,868 A 9/1986 Weiss
5,038,151 A 8/1991 Kaminski
(Continued)

FOREIGN PATENT DOCUMENTS

EP 0749216 A1 12/1996
EP 2221915 A1 8/2010
(Continued)

OTHER PUBLICATIONS

Freescale Semiconductor, "Compact Integrated Antennas: Designs and Applications for the MC1319x, MC1320x, and MC1321x", Document No. AN2731 Rev. 1.4, Jul. 2006, 20 pages.
(Continued)

Primary Examiner — Matthew Mikels
(74) *Attorney, Agent, or Firm* — Faegre Baker Daniels LLP

(57) **ABSTRACT**

An electronic device (**100**) includes an antenna system (**150**) having two antennas (**110**, **120**). A first antenna (**110**) has a first antenna element (**111**) positioned near a first corner (**191**) of a planar, rectangular ground plane (**165**) and a second antenna element (**115**) positioned near a second corner of the ground plane that is diagonally across from the first corner. A second antenna (**120**) has a third antenna element (**121**) positioned near a third corner (**193**) of the ground plane that is adjacent to the first corner and a fourth antenna element (**125**) positioned near a fourth corner (**195**) of the ground plane that is diagonally across from the third corner. At low-band frequencies, the antenna elements (**111**, **115**) of the first antenna (**110**) are driven out-of-phase relative to each other. Similarly, at low-band frequencies, the antenna elements (**121**, **125**) of the second antenna (**120**) are driven out-of-phase relative to each other.

12 Claims, 6 Drawing Sheets

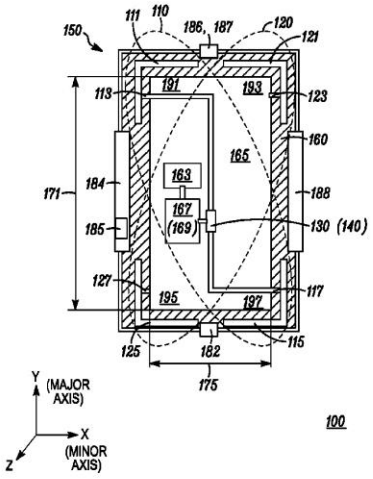

US009653821B1

(12) **United States Patent**
Obeidat et al.

(10) **Patent No.: US 9,653,821 B1**
(45) **Date of Patent: May 16, 2017**

(54) **DUAL BAND ANTENNA WITH A FIRST ORDER MODE AND A SECOND ORDER MODE**

(71) Applicant: **Amazon Technologies, Inc.**, Seattle, WA (US)

(72) Inventors: **Khaled Ahmad Obeidat**, Santa Clara, CA (US); **Ming Zheng**, Cupertino, CA (US); **Adrian Napoles**, Cupertino, CA (US); **Peter Eli Renner**, Sunnyvale, CA (US); **Cheng Jung Lee**, Santa Clara, CA (US)

(73) Assignee: **Amazon Technologies, Inc.**, Seattle, WA (US)

(*) Notice: Subject to any disclaimer, the term of this patent is extended or adjusted under 35 U.S.C. 154(b) by 0 days.

(21) Appl. No.: **14/751,539**

(22) Filed: **Jun. 26, 2015**

(51) **Int. Cl.**
H01Q 21/30 (2006.01)
H01Q 7/00 (2006.01)
H01Q 13/10 (2006.01)

(52) **U.S. Cl.**
CPC ***H01Q 21/30*** (2013.01); ***H01Q 7/00*** (2013.01); ***H01Q 13/106*** (2013.01)

(58) **Field of Classification Search**
CPC H01Q 1/007; H01Q 1/2216; H01Q 1/243; H01Q 1/244; H01Q 1/362; H01Q 1/405; H01Q 1/42; H01Q 1/38; H01Q 1/48; H01Q 21/24; H01Q 21/204; H01Q 9/0407; H01Q 21/30; H01Q 7/00; H01Q 13/106
USPC 343/702, 729, 895, 853
See application file for complete search history.

(56) **References Cited**

U.S. PATENT DOCUMENTS

6,255,999 B1 * 7/2001 Faulkner H01Q 1/243 343/702
6,266,836 B1 * 7/2001 Gallego Juarez D06B 13/00 134/1
6,268,836 B1 * 7/2001 Faulkner H01Q 1/243 343/702
9,325,070 B1 * 4/2016 Obeidat H01Q 9/0407
2006/0017635 A1 * 1/2006 Zheng H01Q 7/00 343/748
2007/0222699 A1 * 9/2007 Modro H01Q 1/243 343/873
2009/0295567 A1 * 12/2009 Bellows H01Q 1/2216 340/539.11
2010/0315303 A1 * 12/2010 Kearney H01Q 1/36 343/767
2011/0063180 A1 * 3/2011 Su H01Q 3/24 343/795
2014/0361931 A1 * 12/2014 Irci H01Q 1/243 343/702

* cited by examiner

Primary Examiner — Lam T Mai
(74) *Attorney, Agent, or Firm* — Lowenstein Sandler LLP

(57) **ABSTRACT**

An antenna structure with a radio frequency (RF) circuit, an antenna carrier, and conductive material disposed on the antenna carrier and coupled to the RF circuit slot is described. The conductive material can radiate or receive first electromagnetic energy as a loop antenna in a first frequency band in a second order mode. The conductive material can include a first slot between portions of the conductive material and a second slot between other portions of the conductive material. The first slot or the second slot can radiate or receive second electromagnetic energy as a slot antenna at a second frequency band in a first order mode. The second frequency band can be higher than the first frequency band.

18 Claims, 8 Drawing Sheets

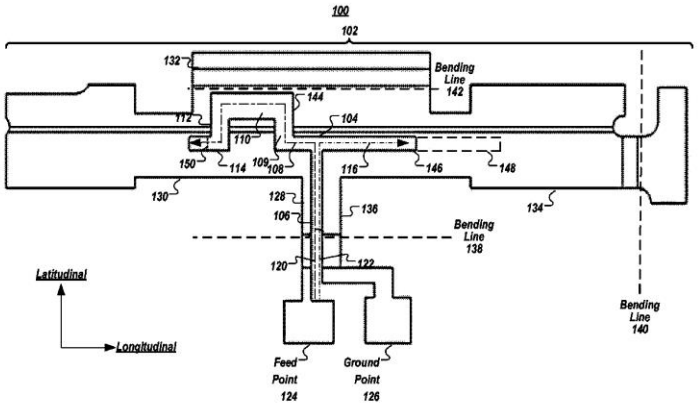

US009648150B1

(12) **United States Patent**
Zhao et al.

(10) **Patent No.: US 9,648,150 B1**
(45) **Date of Patent: May 9, 2017**

(54) **ONE PIECE CONDUCTIVE HOUSING WITH INCORPORATED ANTENNA FOR USE IN AN ELECTRONIC DEVICE**

(71) Applicant: **Motorola Mobility LLC**, Chicago, IL (US)

(72) Inventors: **Jun Zhao**, Vernon Hills, IL (US); **Eric Krenz**, Crystal Lake, IL (US); **Ugur Olgun**, Chicago, IL (US); **Hugh Smith**, Palatine, IL (US)

(73) Assignee: **Motorola Mobility LLC**, Chicago, IL (US)

(*) Notice: Subject to any disclaimer, the term of this patent is extended or adjusted under 35 U.S.C. 154(b) by 0 days.

(21) Appl. No.: **15/235,065**

(22) Filed: **Aug. 11, 2016**

(51) **Int. Cl.**
H01Q 1/24 (2006.01)
H04M 1/02 (2006.01)
H04B 1/3827 (2015.01)

(52) **U.S. Cl.**
CPC ***H04M 1/026*** (2013.01); ***H04B 1/3827*** (2013.01)

(58) **Field of Classification Search**
None
See application file for complete search history.

(56) **References Cited**

U.S. PATENT DOCUMENTS

2009/0046022 A1* 2/2009 Desclos H01Q 1/362 343/702
2014/0266938 A1* 9/2014 Ouyang H01Q 5/321 343/729
2014/0313086 A1* 10/2014 Montevirgen H01Q 1/243 343/702
2016/0226130 A1 8/2016 Allore et al.
2016/0301139 A1 10/2016 Lombardi et al.

OTHER PUBLICATIONS

Ugur Olgun, et al., "NFC Antenna Architecture for Mobile Communication Device with Single-Piece Metal Housing", U.S. Appl. No. 14/824,240, filed Aug. 12, 2015, Jan. 4, 2017.
Ugur Olgun, et al., "Wireless Charging Architecture for Mobile Communication Device with Single-Piece Metal Housing", U.S. Appl. No. 14/872,322, filed Oct. 1, 2015.
Abu Sayem, et al., "Antenna System Including Closely Spaced Antennas Adapted for Operating at the Same or Similar Frequencies", U.S. Appl. No. 15/235,757, filed Aug. 12, 2016.

* cited by examiner

Primary Examiner — David Bilodeau
(74) *Attorney, Agent, or Firm* — Watson Intellectual Property Group

(57) **ABSTRACT**

The present application provides a housing for an electronic device having wireless communication capabilities including an antenna incorporated as part of the housing. The housing includes a one piece conductive housing having an outer edge. One or more windows are located entirely within the one piece conductive housing, where each of the one or more windows has a perimeter. At least a first window of the one or more windows is positioned within the one piece conductive housing proximate a portion of the outer edge of the one piece conductive housing. At least one drive signal is applied across the first window of the one or more windows, which is positioned proximate the outer edge of the one piece conductive housing, at a respective pair of points along the perimeter of the first window.

20 Claims, 3 Drawing Sheets

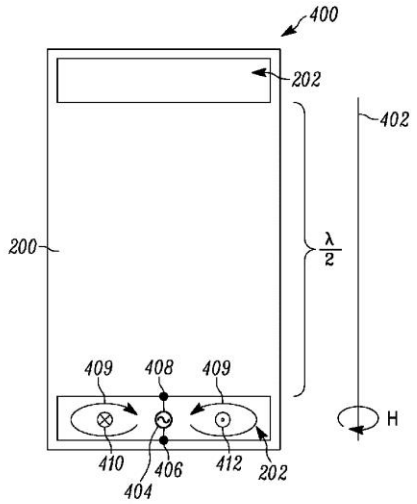

US009654164B2

(12) **United States Patent**
Irci et al.

(10) **Patent No.: US 9,654,164 B2**
(45) **Date of Patent: May 16, 2017**

(54) **REMOVABLE ELECTRONIC DEVICE CASE WITH SUPPLEMENTAL WIRELESS CIRCUITRY**

(71) Applicant: **Apple Inc.**, Cupertino, CA (US)

(72) Inventors: **Erdinc Irci**, Santa Clara, CA (US); **Enrique Ayala Vazquez**, Watsonville, CA (US); **Hongfei Hu**, Santa Clara, CA (US); **Mattia Pascolini**, San Francisco, CA (US); **Ruben Caballero**, San Jose, CA (US)

(73) Assignee: **Apple Inc.**, Cupertino, CA (US)

(*) Notice: Subject to any disclaimer, the term of this patent is extended or adjusted under 35 U.S.C. 154(b) by 0 days.

(21) Appl. No.: **14/685,904**

(22) Filed: **Apr. 14, 2015**

(65) **Prior Publication Data**

US 2016/0309007 A1 Oct. 20, 2016

(51) **Int. Cl.**
H04M 1/00 (2006.01)
H04B 1/3888 (2015.01)
(Continued)

(52) **U.S. Cl.**
CPC ***H04B 1/3888*** (2013.01); ***H01Q 1/243*** (2013.01); *H04M 1/0262* (2013.01); *H04M 1/04* (2013.01)

(58) **Field of Classification Search**
CPC H04B 1/3833; H01Q 5/378; H01Q 9/0407; H01Q 9/0442; H01Q 1/243; H01Q 9/14
(Continued)

(56) **References Cited**

U.S. PATENT DOCUMENTS

6,341,217 B1 1/2002 Wong
6,456,247 B1 9/2002 Hulick et al.
(Continued)

FOREIGN PATENT DOCUMENTS

EP 2528165 11/2012
WO 9801919 1/1998
(Continued)

OTHER PUBLICATIONS

"Our Technology—Antenna79", Antenna79, [Retrieved on Jan. 29, 2015], Retrieved from the Internet:<URL:http://antenna79.wpengine.com/ourtechnology/>.
(Continued)

Primary Examiner — Simon Nguyen
(74) *Attorney, Agent, or Firm* — Treyz Law Group, P.C.; G. Victor Treyz; Michael H. Lyons

(57) **ABSTRACT**

A removable case may receive an electronic device. A male connector in the case may mate with a female connector in the device. A battery in the case may supply power to the device through the male connector. The electronic device may have an antenna formed from peripheral conductive housing structures and an antenna ground. The antenna may include a slot antenna resonating element. The case may have supplemental antenna structures such as a metal patch that overlaps an end of the slot antenna resonating element to retune the slot antenna resonating element to a desired operating frequency after being detuned by dielectric loading from the case. The supplemental antenna structures may overlap antennas of other types and may include tunable circuitry that is adjusted based on information received from the electronic device.

21 Claims, 7 Drawing Sheets

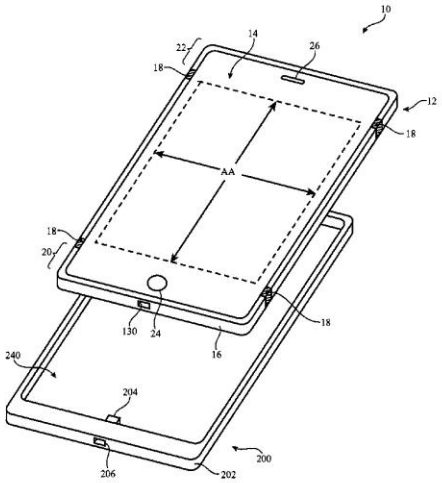

US009654230B2

(12) **United States Patent**
Desclos et al.

(10) **Patent No.: US 9,654,230 B2**
(45) **Date of Patent: *May 16, 2017**

(54) **MODAL ADAPTIVE ANTENNA FOR MOBILE APPLICATIONS**

(71) Applicant: **Ethertronics, Inc.**, San Diego, CA (US)

(72) Inventors: **Laurent Desclos**, San Diego, CA (US); **Sebastian Rowson**, San Diego, CA (US); **Jeffrey Shamblin**, San Marcos, CA (US)

(73) Assignee: **ETHERTRONICS, INC.**, San Diego, CA (US)

(*) Notice: Subject to any disclaimer, the term of this patent is extended or adjusted under 35 U.S.C. 154(b) by 621 days.

This patent is subject to a terminal disclaimer.

(21) Appl. No.: **14/040,531**

(22) Filed: **Sep. 27, 2013**

(65) **Prior Publication Data**

US 2014/0099982 A1 Apr. 10, 2014

Related U.S. Application Data

(63) Continuation-in-part of application No. 13/118,374, filed on May 28, 2011, now abandoned, and a continuation-in-part of application No. 13/289,901, filed on Nov. 4, 2011, now Pat. No. 8,717,241, which is a continuation of application No. 12/894,052, filed on Sep. 29, 2010, now Pat. No. 8,077,116, which is a continuation of application No. 11/841,207, filed on Aug. 20, 2007, now Pat. No. 7,830,320, application No. 14/040,531, filed on Sep. 27, 2013, which is a continuation-in-part of application No. 13/674,078, filed on Nov. 11, 2012, now Pat. No. 8,928,540, and

(Continued)

(51) **Int. Cl.**

H01Q 9/04	(2006.01)
H04B 15/00	(2006.01)
H04B 17/00	(2015.01)
H04B 17/318	(2015.01)
H04B 17/345	(2015.01)
H04B 1/3827	(2015.01)

(52) **U.S. Cl.**

CPC ***H04B 15/00*** (2013.01); ***H04B 17/00*** (2013.01); ***H04B 17/318*** (2015.01); ***H04B 17/345*** (2015.01); *H04B 1/3838* (2013.01)

(58) **Field of Classification Search**

CPC H01Q 1/243; H01Q 5/371; H01Q 5/385; H01Q 5/392; H01Q 9/0442; H01Q 9/145; H01Q 9/42

USPC ..... 343/700 MS, 745, 795, 815, 834

See application file for complete search history.

(56) **References Cited**

U.S. PATENT DOCUMENTS

4,591,863 A * 5/1986 Patsiokas H01Q 1/243 343/702

6,061,025 A * 5/2000 Jackson ..... H01Q 1/38 343/700 MS

(Continued)

Primary Examiner — Tho G Phan

(74) *Attorney, Agent, or Firm* — Coastal Patent Law Group, P.C.

(57) **ABSTRACT**

An adaptive antenna system for mobile applications where the mode of the antenna is optimized dynamically to optimize link quality with intended sources. Interfering signals are suppressed by mode selection to minimize link quality by altering antenna radiation pattern characteristics. A single driven antenna is configured such that the radiating mode can be dynamically adjusted and optimized based on link metrics.

10 Claims, 18 Drawing Sheets